GENERAL NOTES

1. THIS DRAWING WAS DEVELOPED FOR ACCOMPLISHMENT OF 32 PDR CARRONADE CANNON BASED ON A SHIPCHECK OF THE US CONSTITUTION.
2. THIS DRAWING IS BASED UPON THE REQUIREMENTS OF NAVSEA S9AAO-AB-GOS-010 OF 16 SEPTEMBER 1983, WHOSE PROVISIONS SHALL PREVAIL IN AREAS WHERE THIS DRAWING IS SILENT.
3. EXCEPT WHERE OTHERWISE NOTED OR APPROVED BY NAVSEA, THE EFFECTIVE DATE OF FEDERAL OR MILITARY SPECIFICATIONS, PUBLICATIONS, AND STANDARD/TYPE DRAWINGS AND REVISIONS AND CHANGES THERETO SHALL BE THE EFFECTIVE DATE OF NAVSEA S9AAO-AB-GOS-010. LATER SPECIFICATION REVISIONS MAY BE USED PROVIDED THAT THEY MEET THE INTENT AND INTERFACE REQUIREMENTS OF THE SPECIFICATION INVOKED FOR THE SPECIFIC AVAILABILITY.
4. ALL FABRICATION, WELDING AND INSPECTION OF MATERIAL AND STRUCTURE SHALL BE ACCOMPLISHED IN ACCORDANCE WITH MIL-STD-1689(SH)
5. ALL BURRS OR SHARP EDGES LIABLE TO INJURE PERSONNEL ARE TO BE REMOVED OR GROUND SMOOTH.
6. TEMPLATE ALL WORK FROM SHIP AND EQUIPMENT TO INSURE PROPER INSTALLATION.
7. PAINTING OF ALL NEW STRUCTURE AND SUPPORTS, AND REPAINTING OF ALL SURFACES DAMAGED BY WELDING AND REMOVAL OF EQUIPMENT SHALL BE I.A.W. NAVSEA S9086-VD-STM-000/CH 631.
8. THE ORIGIN OF A VIEW IS INDICATED BY A ZONE NUMBER AND LETTER IN PARENTHESIS ( ) BELOW EACH VIEW.
9. WOOD PRESERVATIVE SHALL BE APPLIED TO INACCESSIBLE AREAS AND ALLOWED TO DRY PRIOR TO COVERING.
10. WHITE OAK SHALL BE LAMINATED IN ACCORDANCE WITH MIL-W-15154.
11. ALL PC NOs. REFERRED TO THIS NOTE SHALL BE GALVANIZED.

LIST OF MATERIAL (QUANTITY FOR TWO CANNONS)

ITEM NO.	QTY RQD	DESCRIPTION	LAST NO. USED	SIZE RQD	MIL SPEC	MTL REQ	NSN OR MFGR PT NO.	SCE	APL NO.	UNIT WT	REMARKS	TOTAL LENGTH OF PC
1	2	ELEVATOR SCREW 3" DIA BAR			QQ-S-763	CRES	9510-00-189-0601		GEN NOTE 11	24.03 L.F.	1.6 TPI - SQUARE THREAD	25"
2	8	HAFT 1" DIA BAR					9510-00-189-0585			2.67 L.F.		5¼"
3	2	STAY 2¾" DIA BAR					9518-00-189-0600			20.19 L.F.		2¾"
4	4	SET SCREW ¼-20NC			COML					—		¾"
5	4	BED			MIL-L-20370	W. OAK				47.0 C.F.		18"
6	2	NEWEL PIN 3½" DIA BAR			QQ-S-763	CRES	9510-00-189-0603		GEN NOTE 11	32.71 L.F.		18"
7	2	KEY 1½" x ¼" BAR			QQ-S-741	O.S.	9510-00-189-1556			1.28 L.F.	SIM PC #4 of REF #2	5"
8	4	CAPSQUARE PLATE			ASTM A47	CAST IRON					SIM TO REF #2 - PC # 6	12⅝"
9	4	CAPSQUARE BOLT			ASTM A47						SIM TO REF #2 - PC # 9	12"
10	14	CLINCH RING 1¼" DIA I.D.								—	SIM TO REF #2 - PC # 205	
11	4	KEY 1½" x ¼" BAR			QQ-S-741	O.S.	9510-00-189-1556			1.28 L.F.	EQUAL TO REF #2 - PC # 11	3⅛"
12	26	RIVET 1¼" DIA BAR			QQ-S-763	CRES	9510-00-189-0584			4.17 L.F.	SIM TO REF #2 - PC # 25	5¼"
13	12	CAPSQUARE EYEBOLT. 1¼" DIA			ASTM A47	CAST IRON					SIM TO REF #2 - PC # 10	11½"
14	2	FIGHTING PIN 4⅞" DIA BAR			QQ-S-763	CRES	9510-00-189-0601			58.6 L.F.		13⅜"
15	2	KEY 1½" x ¼" BAR			QQ-S-741	O.S.	9510-00-189-1556		GEN NOTE 11	1.28 L.F.	SIM TO REF #2 - PC # 11	5¾"

(CONTINUED ON SHEET 2)

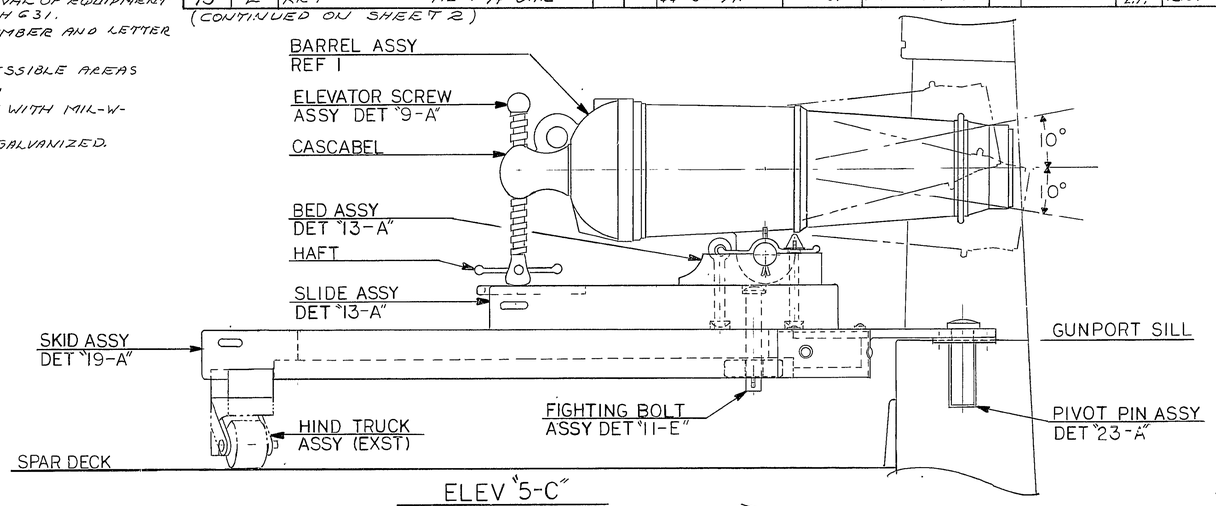

ELEV "5-C"
SCALE: 1½" = 1'-0"
(5-B)

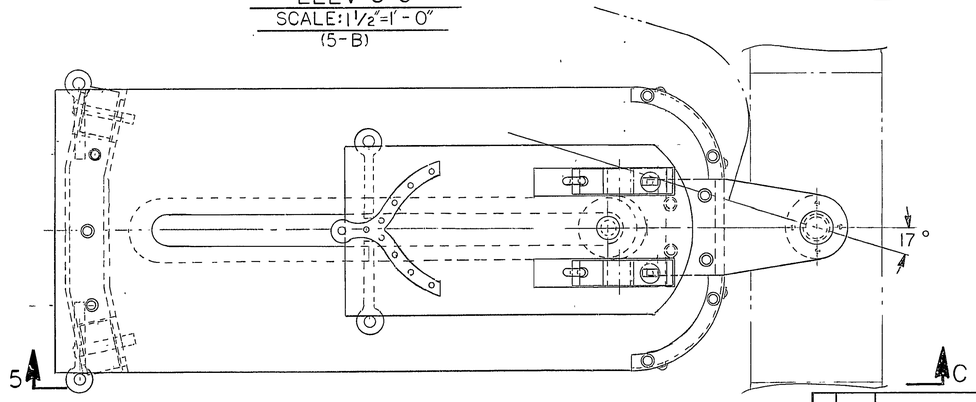

PLAN VIEW "5-B"
32 PDR CARRONADE CANNON CARRIAGE
SCALE: 1½" = 1'-0"

REVISIONS

REV	ZONE	DESCRIPTION	BY	DATE	APPROVED

NO.	HULL	TITLE	IDENT
2		GUN CARRIAGE 32 PDR CARRONADE	BOSTON 22364
1	IX21	32 PDR CARRONADE CANNON BRL	53711-700-6184378

REFERENCES

THIS DRAWING HAS BEEN SHIPCHECKED AGAINST THE SHIP INDICATED IN NOTE 1 AND IS VERIFIED AS BEING APPLICABLE. PLANNING YARD | DATE

A PROOFING SHIPCHECK HAS BEEN CONDUCTED ON THE SHIP INDICATED IN NOTE 1 AND THIS DRAWING IS CERTIFIED AS BEING ACCURATE. PLANNING YARD | DATE

REV	SHIPALT NUMBER	WT GP	WT (LBS)	I R XI OR XR	VCG REF BL	LCG REF ⅓	F OR A	TCG REF CL	P S OR O	VAL BY

WEIGHT CONTROL DATA

LEVERS IN FEET TO THE NEAREST TENTH OF A FOOT
USE SEPARATE LINES FOR EACH WT GRP, S/A, REV, WT INSTL, WT RMV.
I = INSTALL, R = REMOVE, XI = LOAD ITEM INSTALLED, XR = LOAD ITEM REMOVED. F = FWD, A = AFT, P = PORT, S = STBD, O = C

DIMENSIONAL TOLERANCES UNLESS OTHERWISE SPECIFIED

MACHINED			GEOMETRIC (WHERE IND)		
DIM.	DEC	FRAC	SYM	GEOMETRY	TOL
UNDER 6		± 1/	—	FLAT & STR	/IN
6 TO 24		± 1/	⊥	PERPENDICULAR	/IN
OVER 24		± 1/	∥	PARALLELISM	/IN
DIM ARE IN INCHES			◎	CONCENTRICITY	/IN
FILLETS & RADII TO BE			SYM IN ACCORDANCE WITH		
TOL ON ANGLES ± °					

REVISION STATUS OF SHEETS

SHIP	REV	SHIPCK BY	DT
IX 21	—		

SHIP APPLICABILITY

CONTRACT NO.
FSCM NO.

		DATE
PREPARED		
CHECKED		
ENGINEER		
APPROVED		

AUTHORITY:
CONST: DGM: mj
8305 SER 290-83
8 NOVEMBER 1983

SUPERVISOR OF SHIPBUILDING CONVERSION & REPAIR USN
BOSTON, MA. 02210

		DATE
PREPARED	DEPARTS 31 MSHILLICUDDY 11/85	
CHECKED	FPG	
ENGINEER	FPG	
APPROVED	RMP	9/14/85

ACCEPTED FOR NAVSEA
RMPanier
CODE 252
APPROVED BY NAVSEA

DEPARTMENT OF THE NAVY
NAVAL SEA SYSTEMS COMMAND
WASHINGTON D.C. 02382

USS CONSTITUTION
1812 ERA 32 POUNDER
CARRONADE CANNON

32 PDR CARRONADE CANNON

SIZE	FSCM NO.	WT GRP	NAVSEA DRAWING NO.	REV
F	53711	700	6184310	—

SCALE: AS SHOWN | SHEET 1 OF 3

IXSI-700-6184310

ITEM NO	QTY	DESCRIPTION	MIL-SPEC	MATL	STOCK NO	WT	REMARKS	TOTAL LENGTH
16	2	RETAINER 7 3/4" DIA BAR	QQ-S-763	CRES	9510-00-189-0608	160.4 L.F.		2 1/4"
17	12	CARRIAGE BOLT 2 1/4" DIA BAR	↓	↓	9510-00-189-0596	13.52 L.F.	SIM TO REF #2 PC# 24 GEN NOTE 11	7"
18	16	CLINCH RING 1 1/8" DIA I.D.	ASTM A47	CAST IRON	—		206	
19	6	TRUCK BOLT 2 1/4" DIA BAR	QQ-S-763	CRES	9510-00-189-0596	13.52 L.F.	22	16 1/2"
20	2	SKID	MIL-L-20370	W. OAK		47.0 C.F.	GEN NOTE 10	
21	2	SLIDE	↓	W. OAK		47.0 C.F.		
22	2	SOCKET PLATE 30.6# PL	MIL-S-22698	O.S.	9515-00-233-6268	30.6 S.F.	GEN NOTE 11 8" DIA.	
23	2	PIVOT PIN 4" DIA BAR	QQ-S-763	CRES	9510-00-189-0604	42.73 L.F.		10 3/4"
24	2	PIVOT SOCKET 3" DIA STD PIPE	MIL-T-16343	O.S.	4710-00-277-8710	7.58 L.F.		
25	2	PIVOT PLATE 40.8# PL	MIL-S-22698	O.S.	9515-00-233-6269	40.8 S.F.		
26	4	FENDER 10.2# PL	↓	↓	9515-00-233-6261	10.2 S.F.		
27	4	FENDER TOP 10.2# PL	↓	↓	9510-00-233-6261	10.2 S.F.	↓	
28	2	RISER	MIL-L-20370	W. OAK		47.0 C.F.		
29	2	PIVOT PLATE BASE 40.8# PL	MIL-S-22698	O.S.	9515-00-233-6269	40.8 S.F.	GEN NOTE 11	
30	2	INHAUL EYE PLATE 40.8# PL	MIL-S-22698	O.S.	9515-00-233-6269	40.8 S.F.		
31	2	SOCKET BASE 10.2# PL	↓	↓	9515-00-233-6261	10.2 S.F.	3 1/4" DIA	
32	18	CLINCH RING 7/8" INSIDE DIA.	ASTM A97	CAST IRON	—		SIM REF #2 PC# 205	
33	8	RIVET 1 3/4" DIA BAR	QQ-S-763	CRES	9510-00-189-0592	8.18 L.F.	SIM REF #2 PC# 26	6 1/2"
34	2	PIVOT BASE CONNECTOR 40.8# PL	MIL-S-22698	O.S.	9515-00-233-6269	40.8 S.F.	↓	

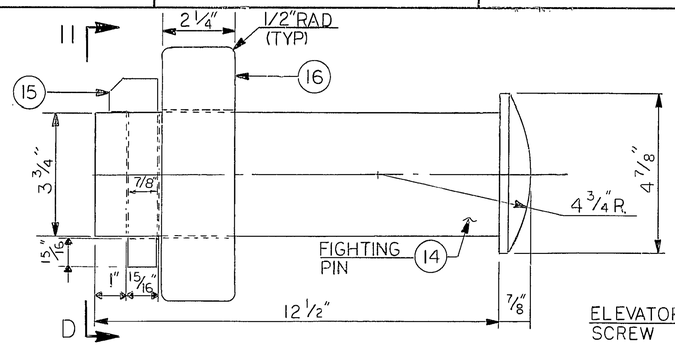

DETAIL "11-E"
SCALE: 6" = 1'-0"
(13-A)

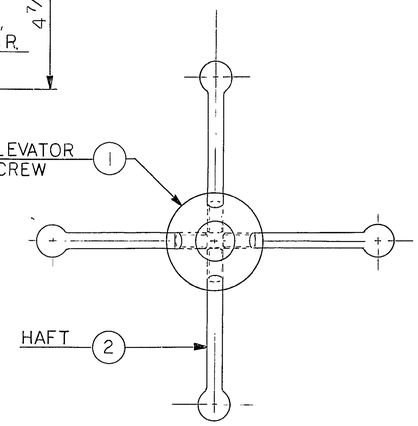

SECT "9-D"
SCALE: 6" = 1'-0"
(9-A)

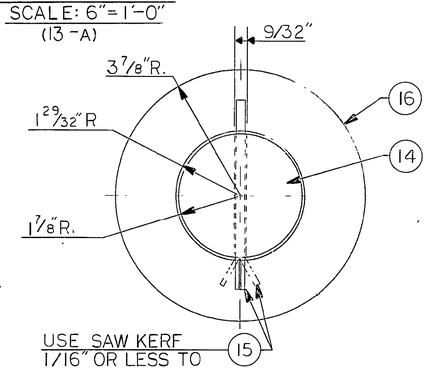

DETAIL "11-D"
SCALE: 6" = 1'-0"
(11-E)

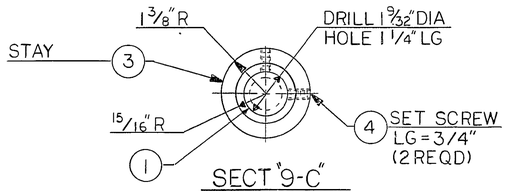

SECT "9-C"
SCALE: 6" = 1'-0"
(9-A)

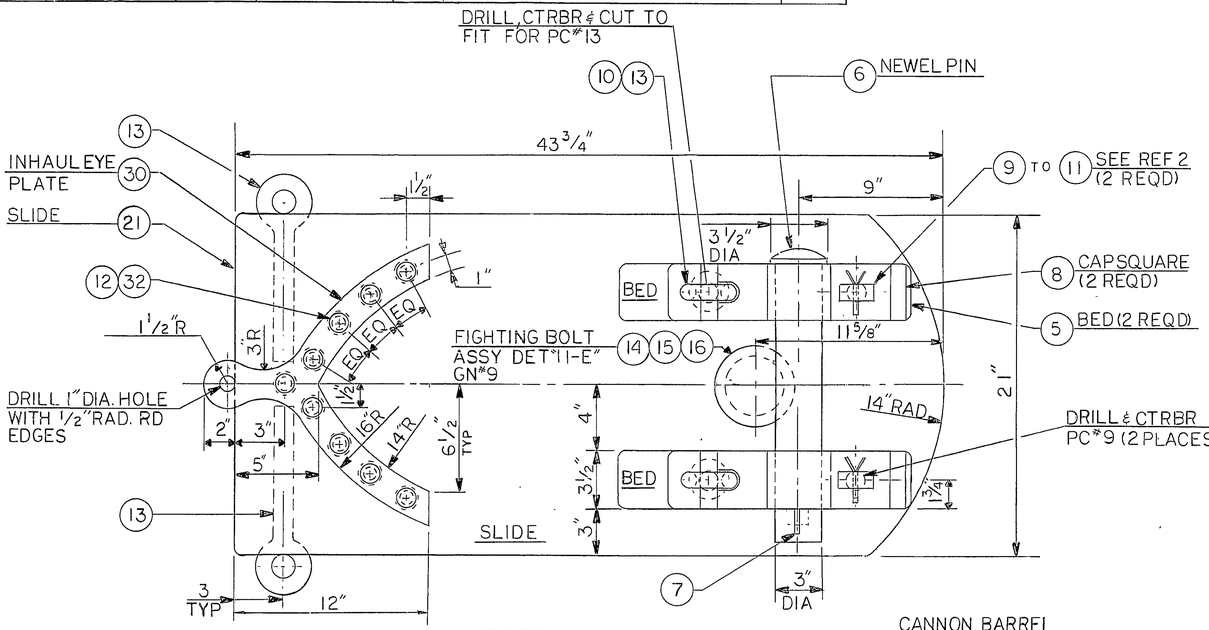

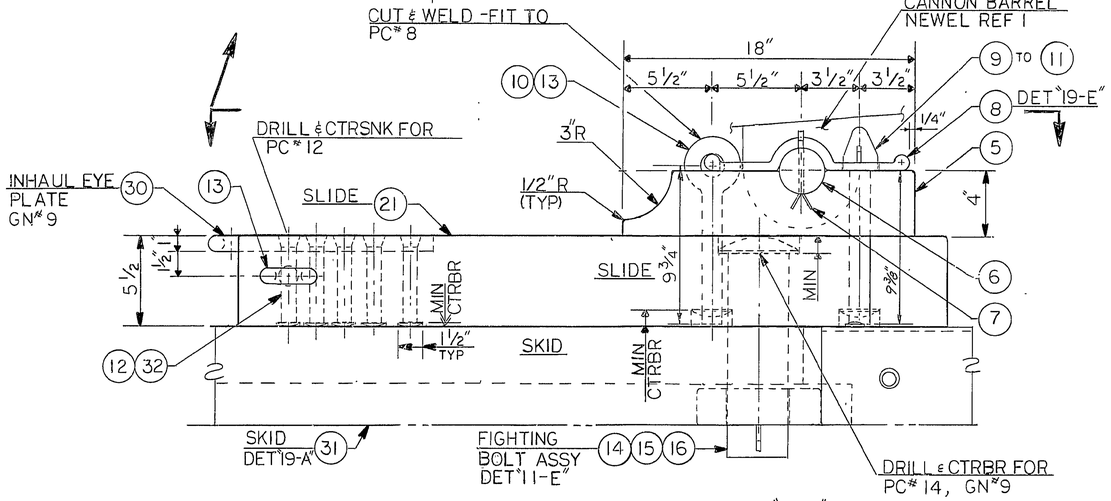

DETAIL "13-A"
SCALE: 3" = 1'-0"
(5-C)

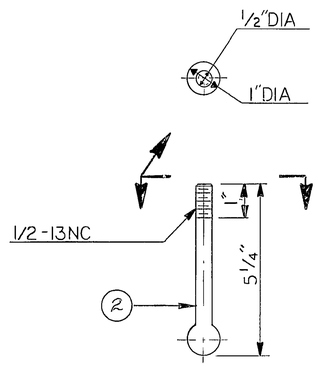

DET "11-A"
SCALE: 6" = 1'-0"
(9-A)

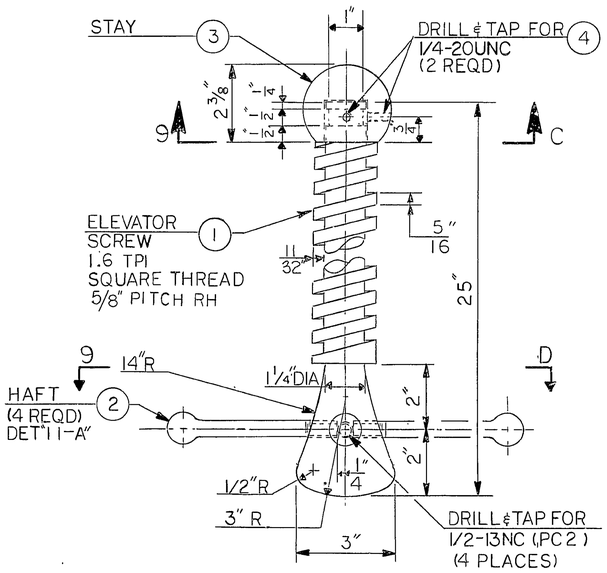

DET "9-A"
SCALE: 6" = 1'-0"
(5-C)

SIZE	FSCM NO.	WT GRP	NAVSEA DRAWING NO.	REV
F	53711	700	6184310	—
SCALE: AS SHOWN			SHEET 2	

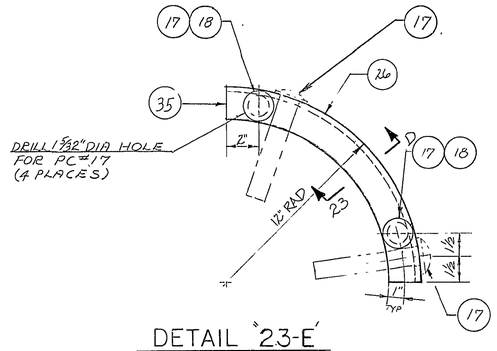

DETAIL "23-E"
SCALE: 3" = 1'-0"
(19-A)

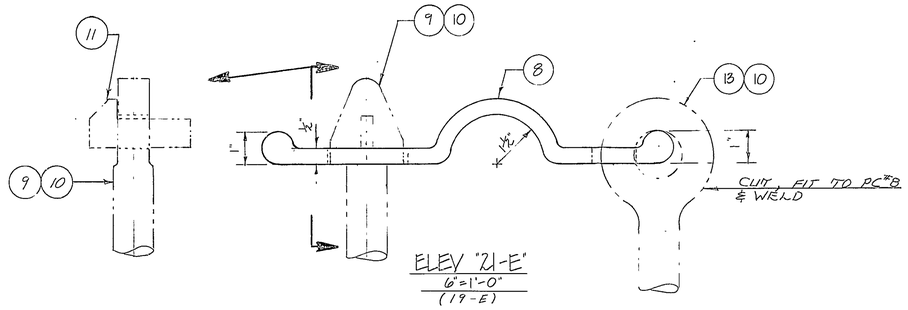

ELEV "21-E"
6" = 1'-0"
(19-E)

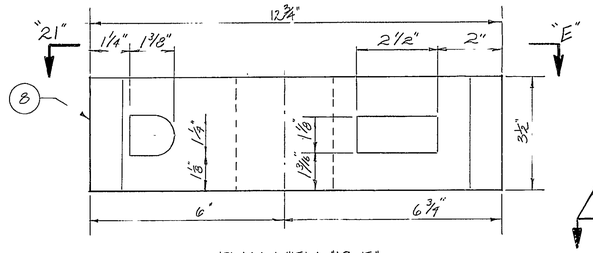

PLAN VIEW "19-E"
CAPSQUARE
6" = 1'-0"
(13-A)

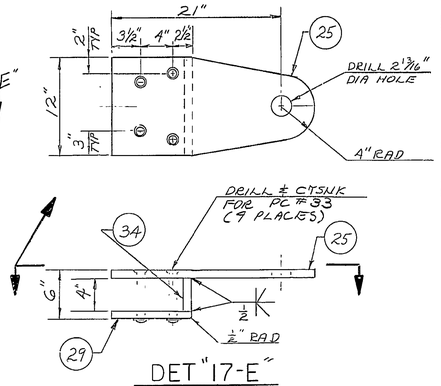

DET "17-E"
SCALE: 1 1/2" = 1'-0"
(19-A)

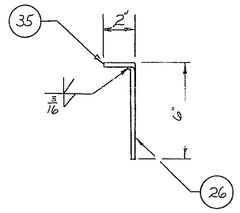

DETAIL "23-D"
CORNER BUMPER
3" = 1'-0"
(23-E)

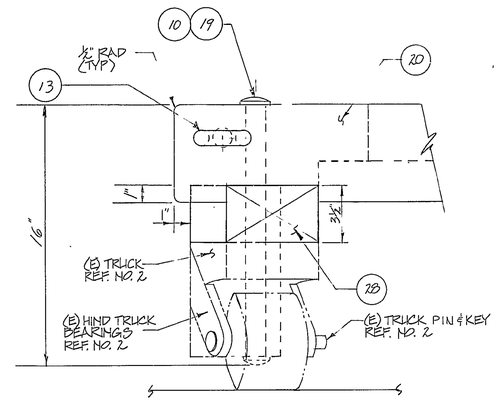

ELEV. "21-D"
3" = 1'-0"
(19-D)(21-A)

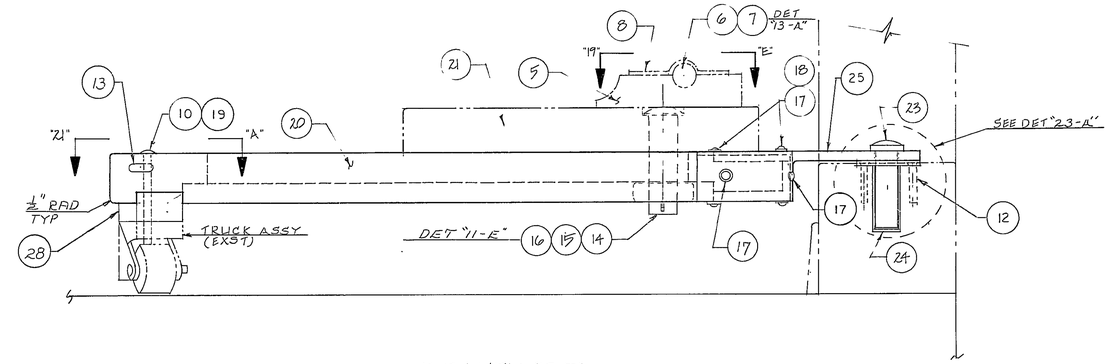

ELEV. VIEW "19-D"
1 1/2" = 1'-0"
(19-A)

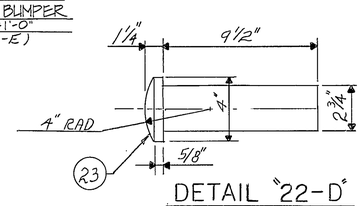

DETAIL "22-D"
SCALE: 3" = 1'-0"
(23-A)

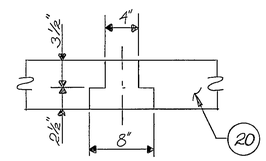

SECT "20-C"
SCALE: 1 1/2" = 1'-0"
(19-A)

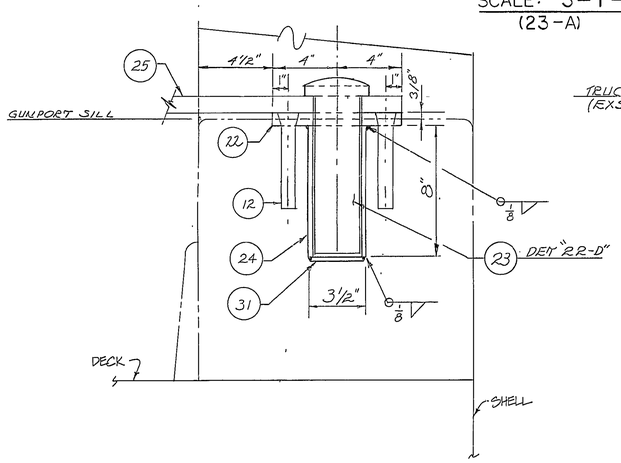

DETAIL "23-A"
3" = 1'-0"
(19-A)

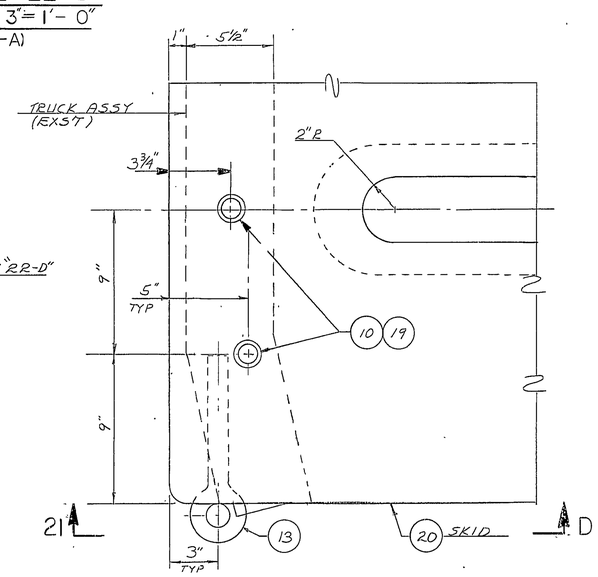

DETAIL "21-A"
3" = 1'-0"
(19-A)

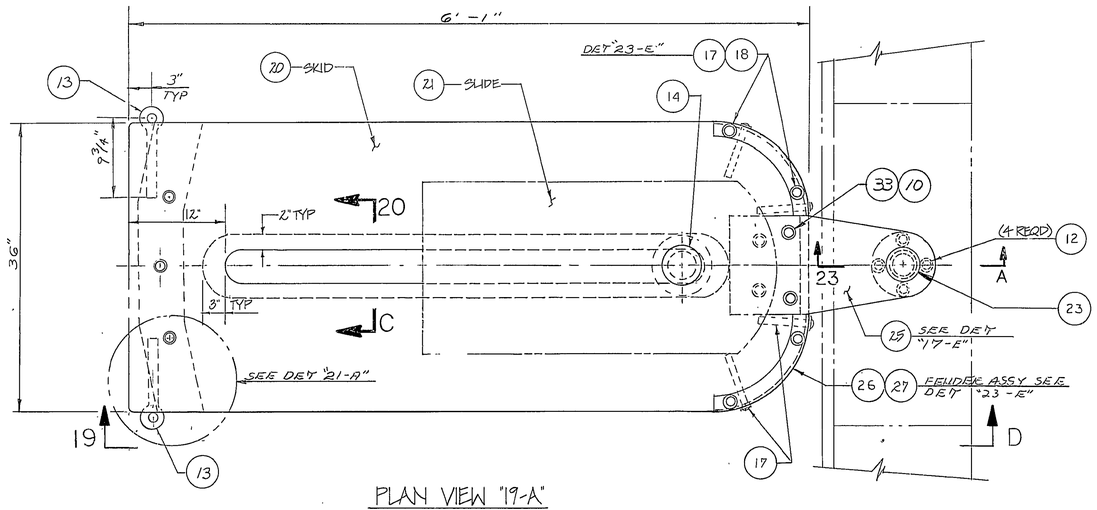

PLAN VIEW "19-A"
32 PDR CARRONADE CANNON CARRIAGE
1 1/2" = 1'-0"
(5-C)

SIZE	FSCM NO.	WT GRP	NAVSEA DRAWING NO.	REV
F	53711	700	6184310	—
SCALE: AS SHOWN			SHEET 3	